BARRE DE CHARGE 25X15

SOFADI

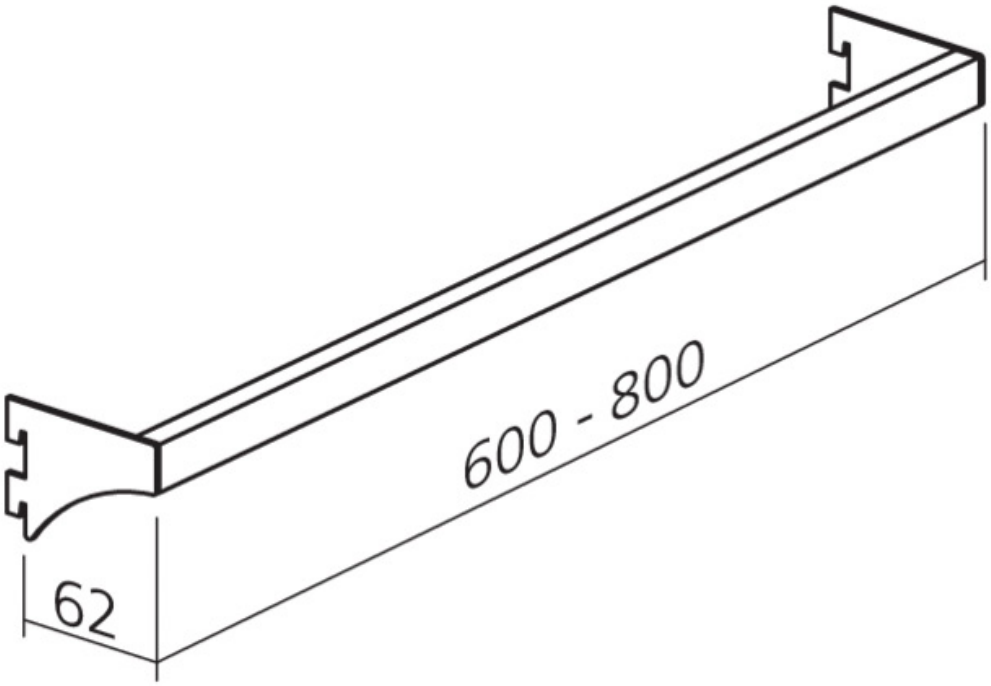

http://www.socomenal.com/barre-de-charge-25x15-p30677