BOUTON BALLON

SIRO

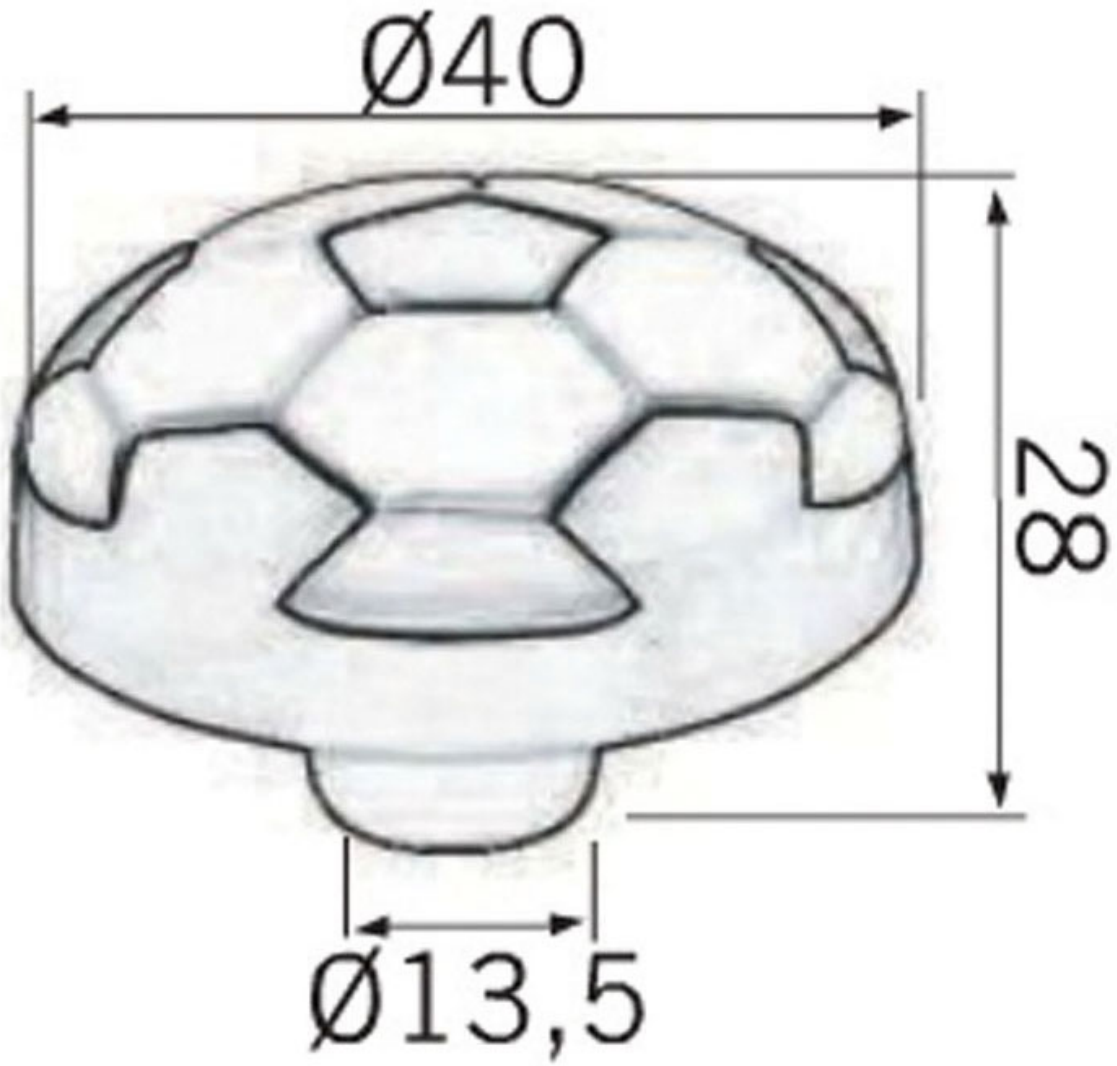

http://www.socomenal.com/bouton-ballon-p30983