GOUJON

ITALIANA FERRAMENTA

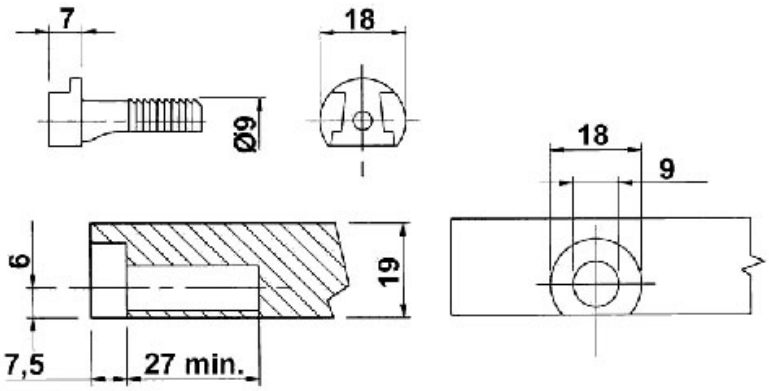

https://www.socomenal.com/goujon-p2776

Tel : 03 88 78 96 96 Fax : 02 43 30 26 16 www.socomenal.com