RACCORD 90°
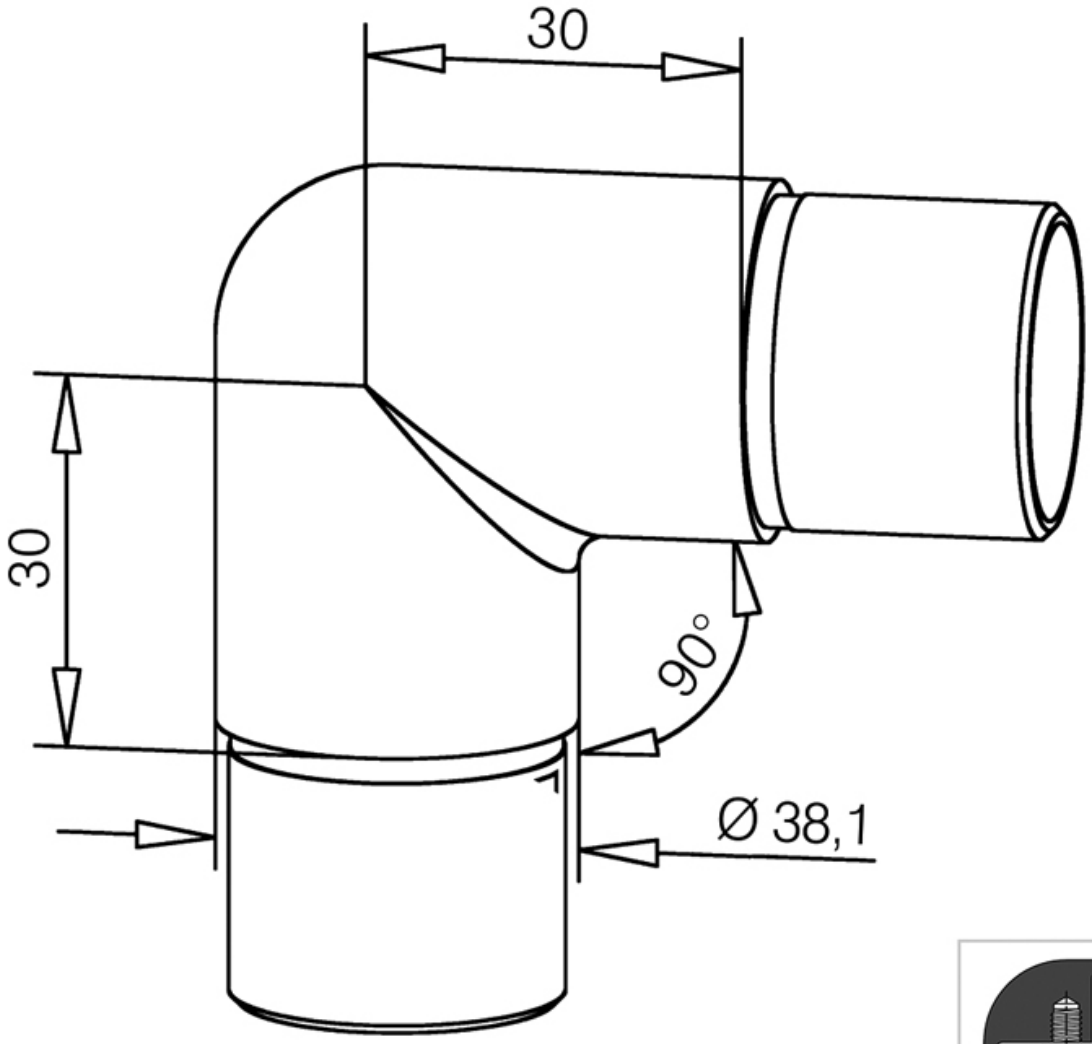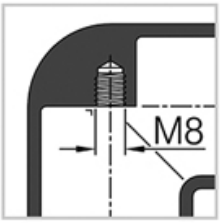
MB2