SUPPORT TV LED INCLINABLE BRAS ARTICULÉ
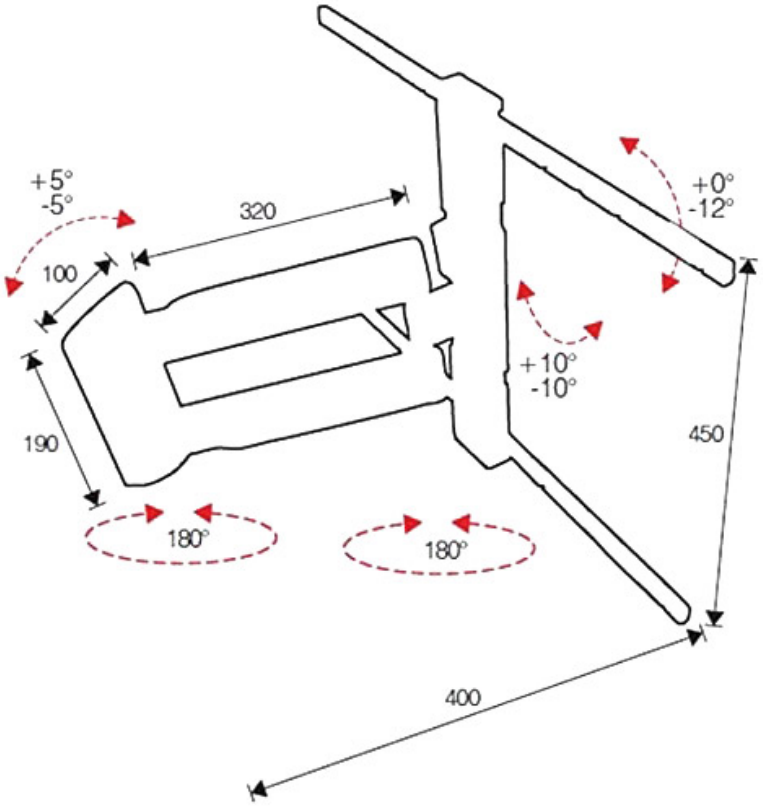
ITAR